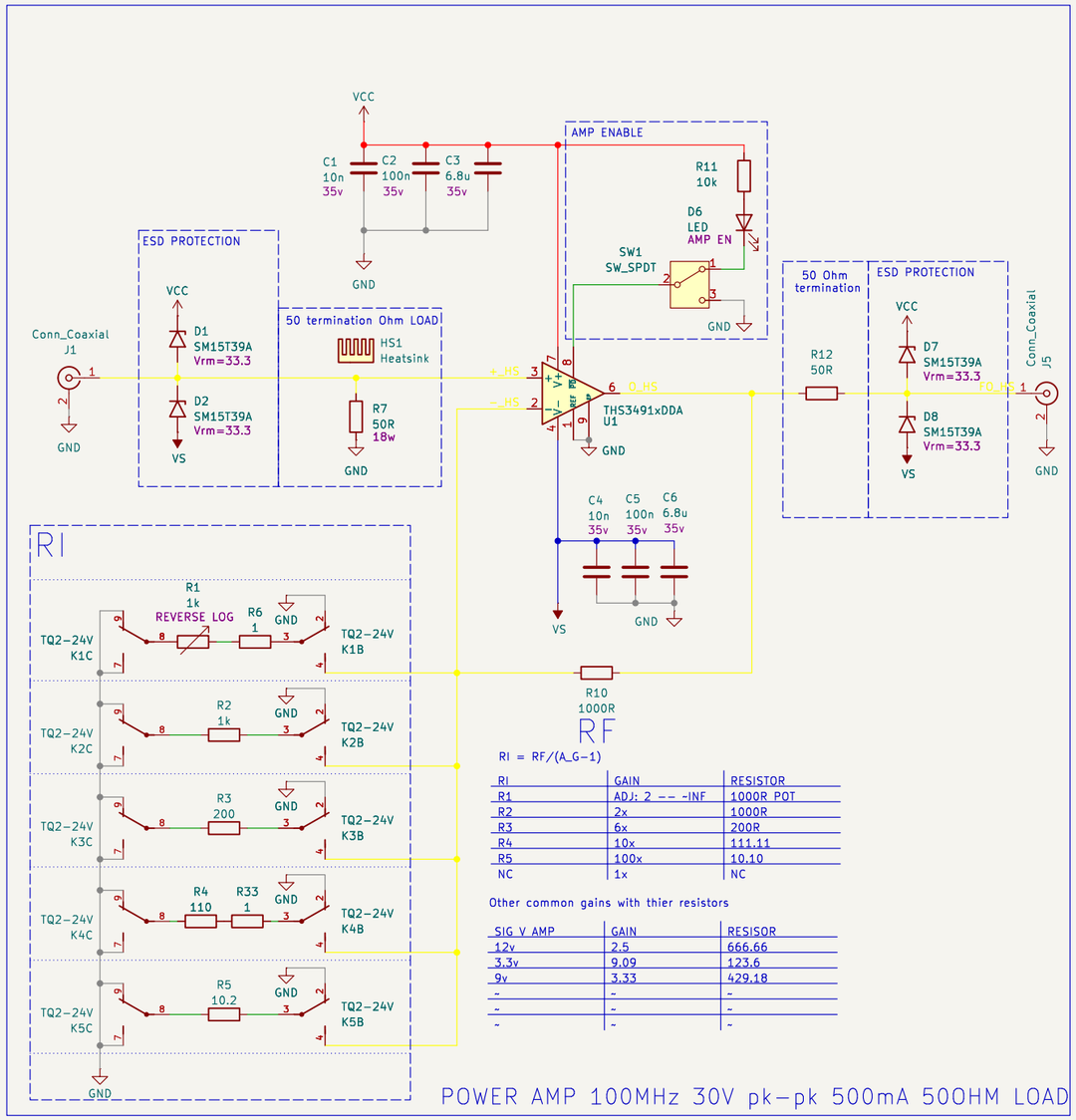

RI	GAIN	RESISTOR
R1	ADJ: 2 -- -INF	1000R POT
R2	2x	1000R
R3	6x	200R
R4	10x	111.11
R5	100x	10.10
NC	1x	NC

SIG V AMP	GAIN	RESISOR
12v	2.5	666.66
3.3v	9.09	123.6
9v	3.33	429.18
-	-	-
-	-	-
-	-	-

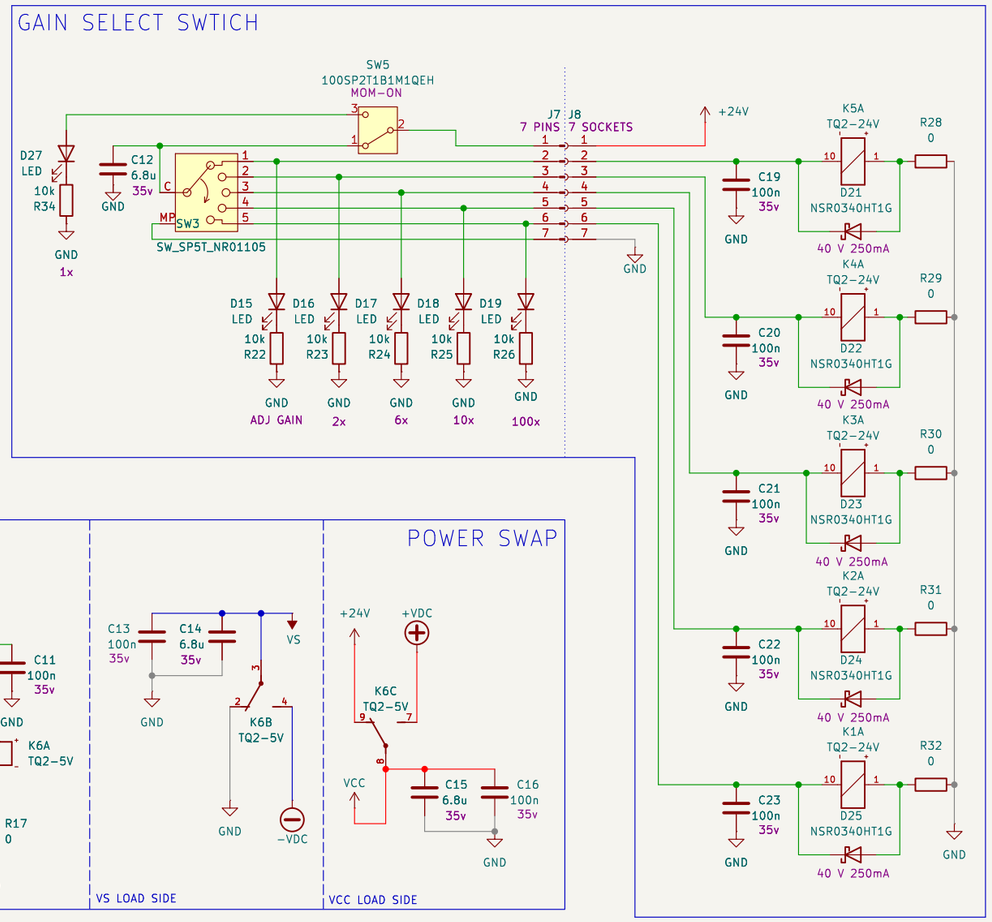

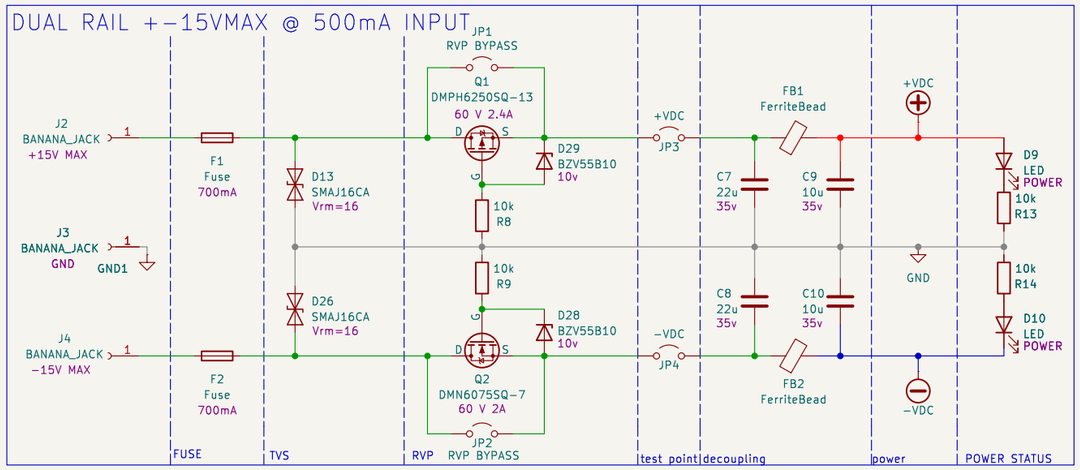

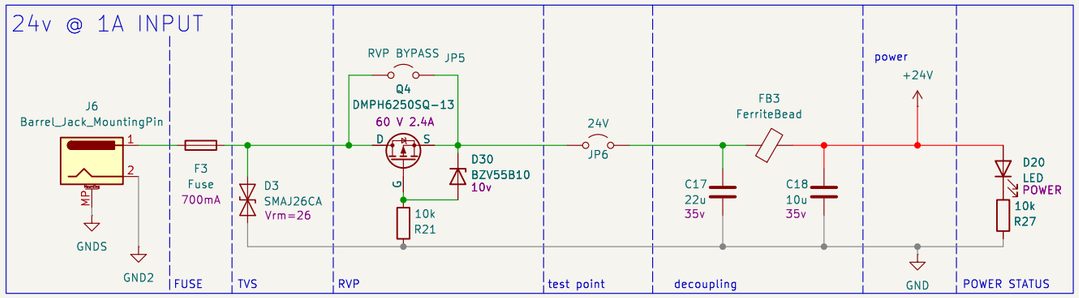

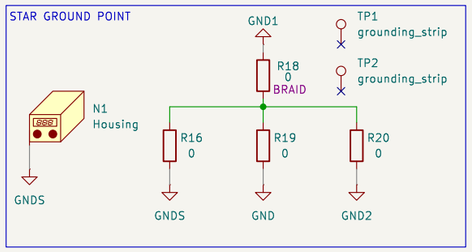

stack up GND

HS SIG

GND

LS SIG / PWR

Sheet: /
File: 10MHz-amp.kicad_sch

Title:

Size: A3	Date:	Rev:
KiCad E.D.A. 9.0.4		Id: 1/1